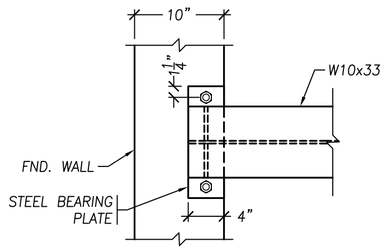

PLAN DETAIL

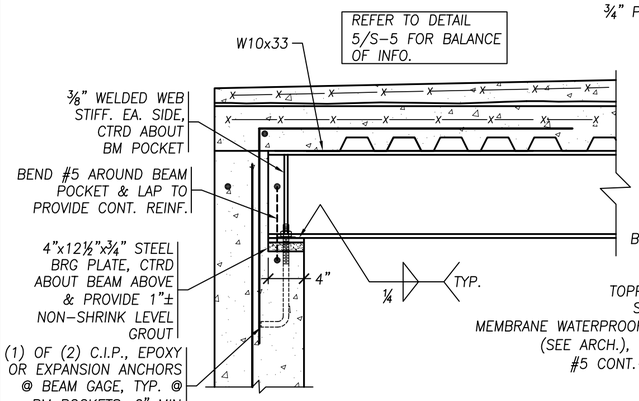

3 SECTION S-1 NTS

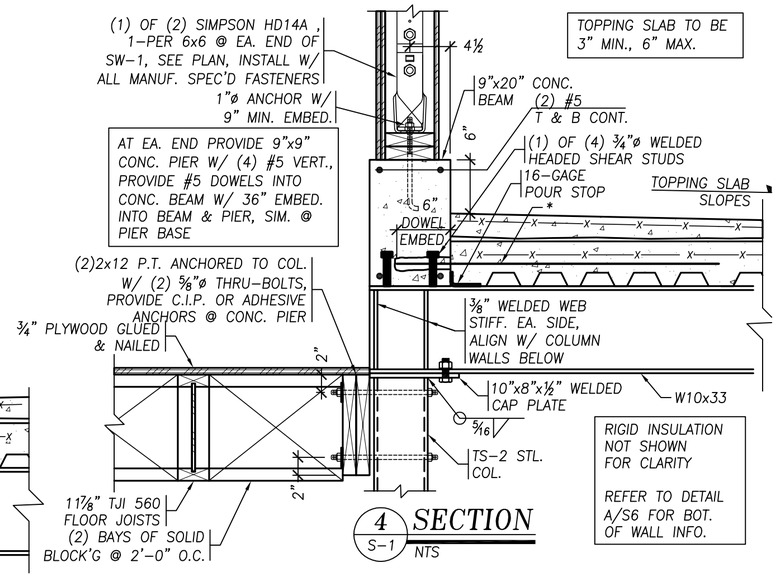

TOPPING SLAB TO BE 3" MIN., 6" MAX.

RIGID INSULATION NOT SHOWN FOR CLARITY

REFER TO DETAIL A/S6 FOR BOT. OF WALL INFO.

4 SECTION S-1 NTS

SLAB-ON-DECK NOTES:

PUDDLE-WELD DECK TO ALL STEEL BEAMS @12" O.C. STAGGERED (TYP.)

SLOPING TOPPING SLAB SHALL BE 2" MIN., 6" MAX.

ALL CONCRETE USED IN FRAMED SLABS SHALL INCLUDE DCI CORROSION INHIBITOR

PROVIDE RIGID INSULATION BETWEEN CONCRETE SLAB-ON-DECK & WATER-PROOFING MEMBRANE, REFER TO ARCH. DWGS. FOR MORE INFO.

G.C. SHALL PROVIDE TAPCON SCREWS AS REQ'D TO SECURE DECK TO SHELF DURING CONCRETE POUR

ALT. INSTALLATION FOR SLAB DOWELS: INSTALL WITH THREADED INSERTS OR CAST REBAR INTO WALL W/ STANDARD HOOK

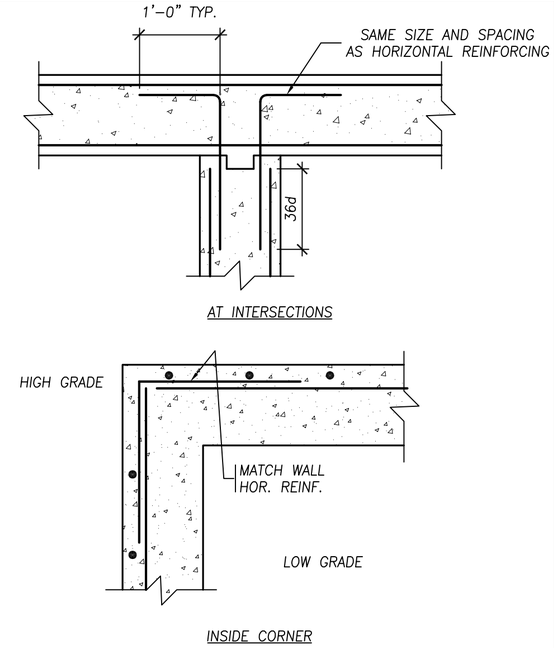

PLAN DETAIL OF TYPICAL WALL CORNER BAR REINFORCING

NTS

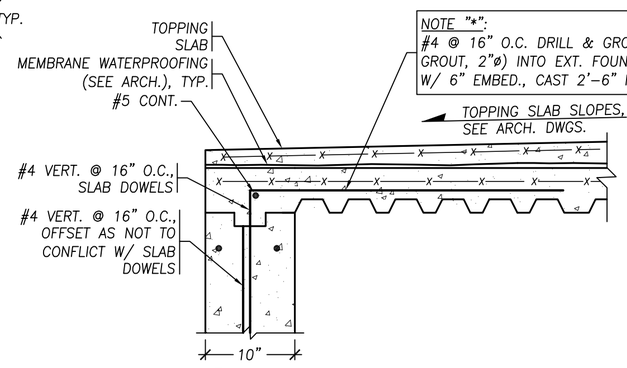

NOTE "*": #4 @ 16" O.C. DRILL & GROUT (NON-SHRINK GROUT, 2"ø) INTO EXT. FOUNDATION WALL W/ 6" EMBED., CAST 2'-6" INTO SLAB

5 SECTION S-1 NTS

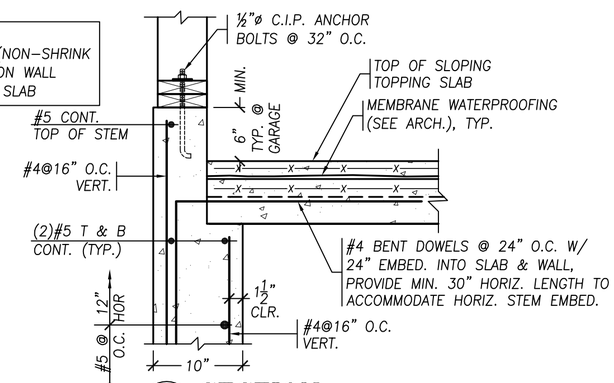

6 SECTION S-1 NTS

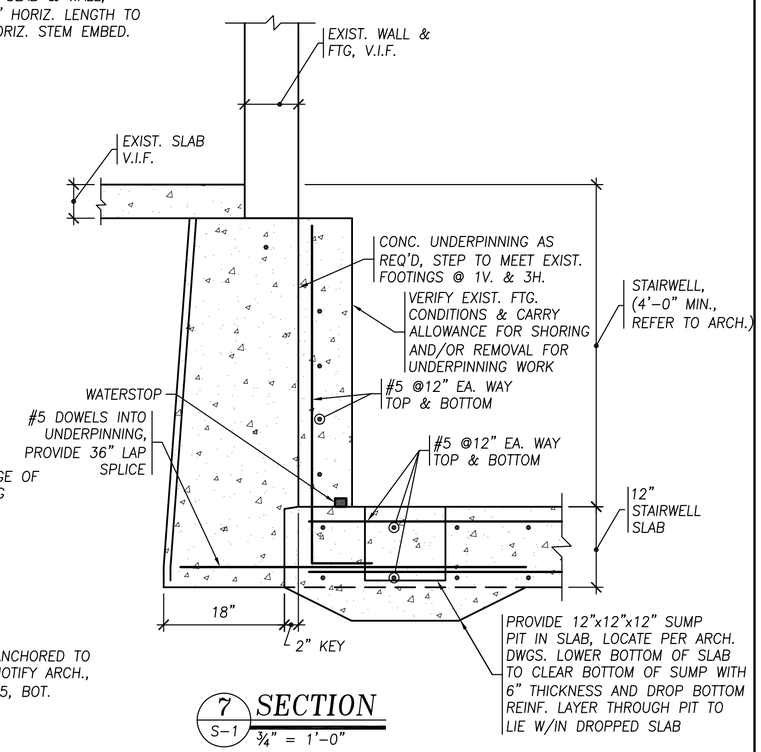

7 SECTION S-1 ¾" = 1'-0"

*FOOTING CONDITONS TO BE ADJUSTED UPON VERIFICATION OF EXISTING FOOTING AND SOIL CONDITIONS

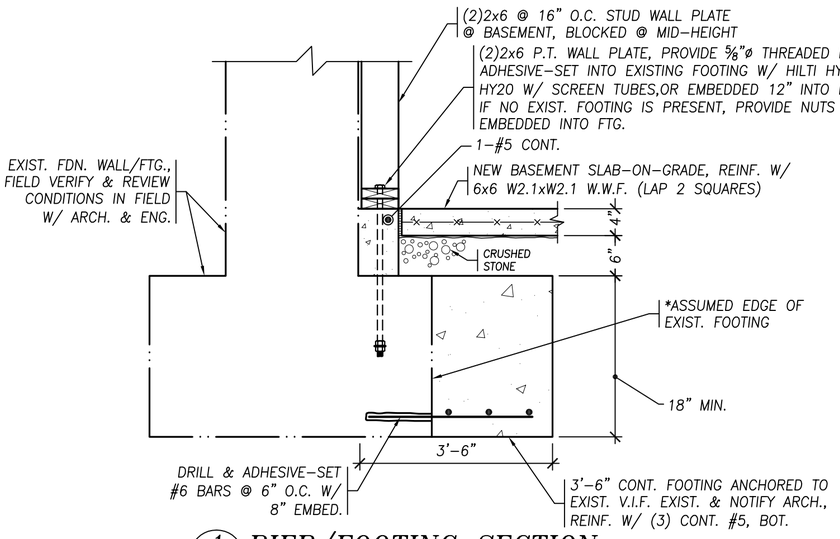

1 PIER/FOOTING SECTION S-1 ¾" = 1'-0"

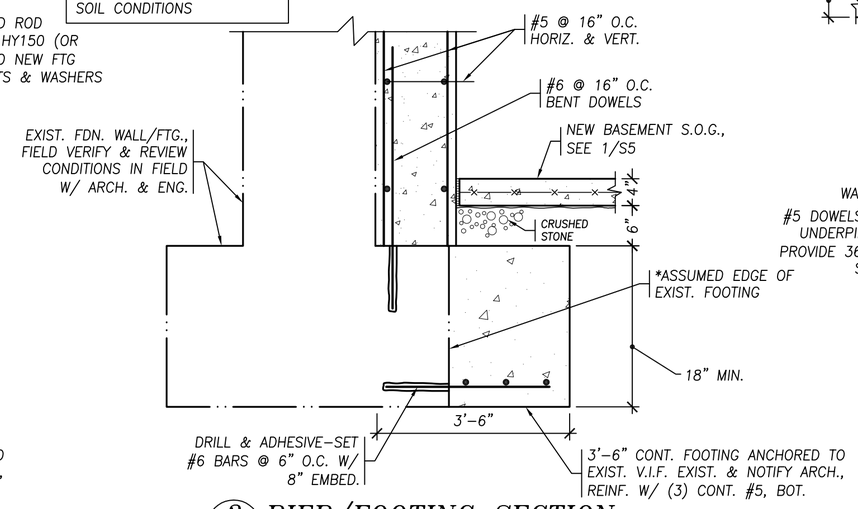

2 PIER/FOOTING SECTION S-1 ¾" = 1'-0"

RUSSELL FORD TREMAINE ARCHITECT (617) 567-7788

Structures North CONSULTING ENGINEERS, INC.
60 Washington St., Suite 401
Salem, MA. 01970-3517
T 978.745.6817 I F 978.745.6067
www.structures-north.com

5 & 6 BRIGHAM STREET

EAST BOSTON, MA

DECEMBER 20, 2007

Structural Details

As Noted

S-5

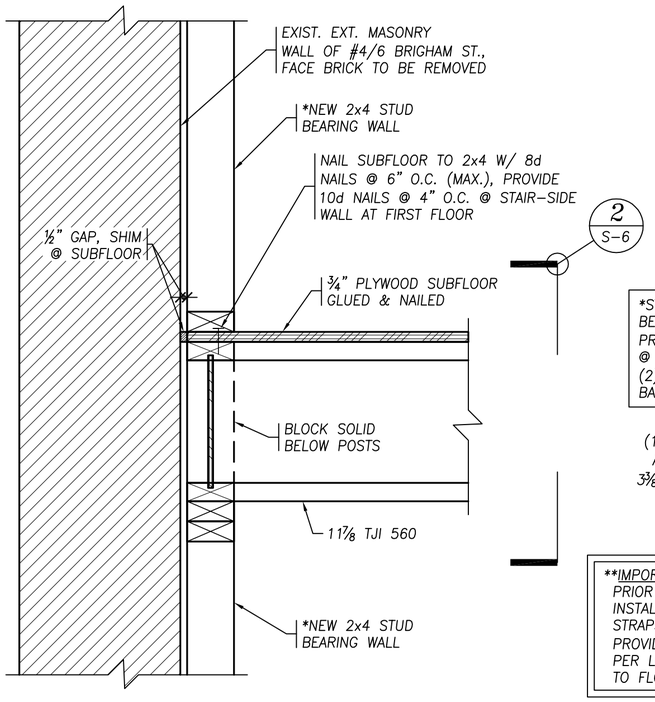

1A SECTION BETWEEN FLOOR/ROOF JOISTS
S-2 S-3 S-4 S-6
1½" = 1'-0"

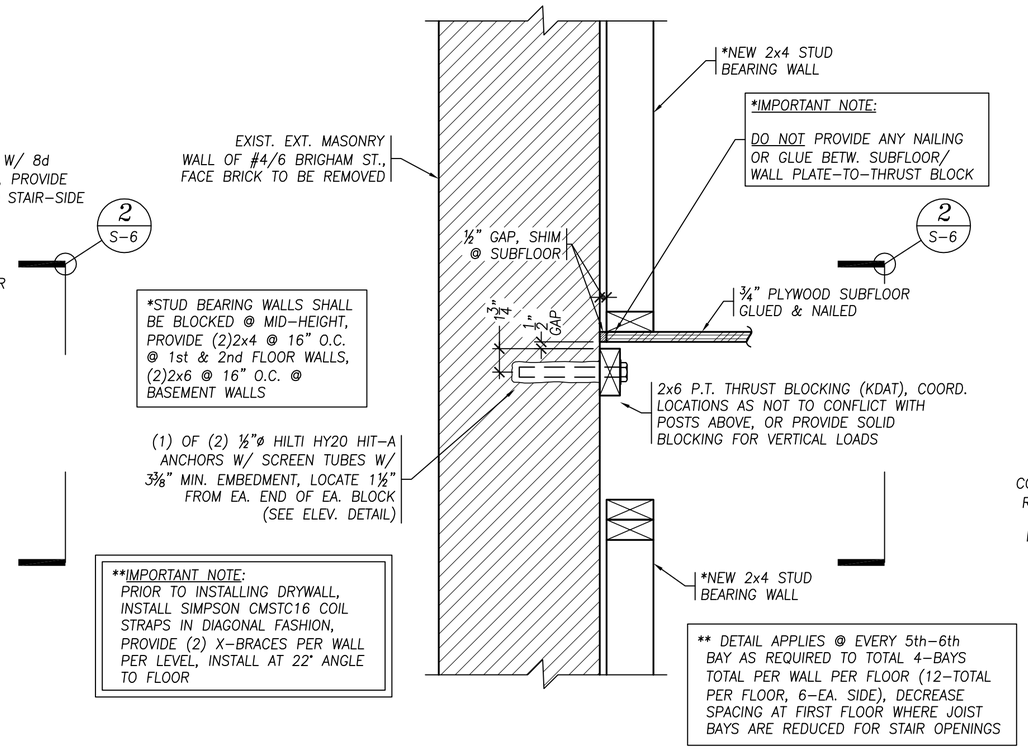

1 SECTION BETWEEN FLOOR/ROOF JOISTS
S-2 S-3 S-4 S-6
1½" = 1'-0"

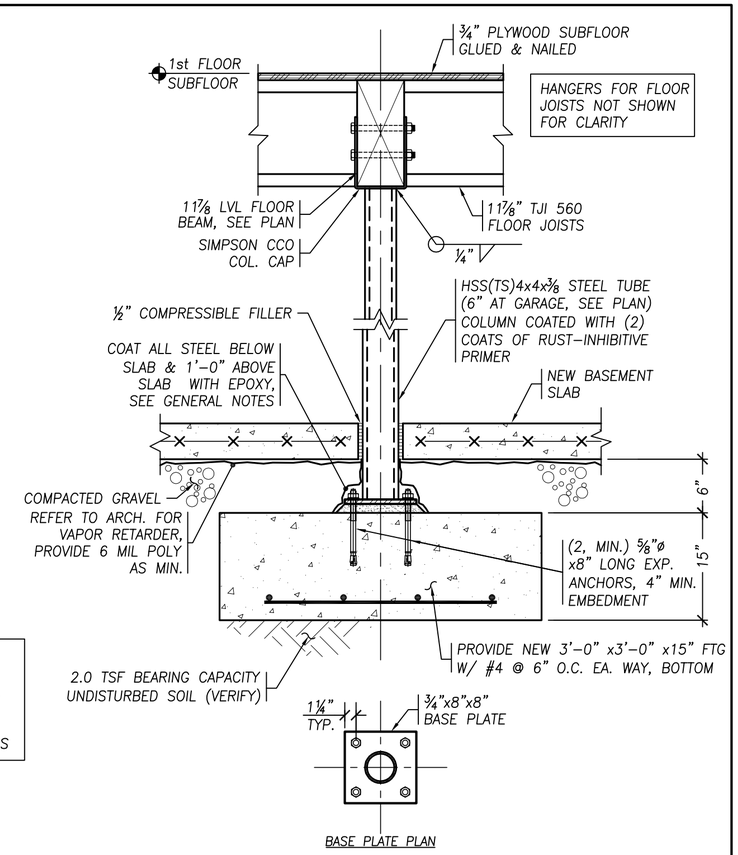

4 SECTION THRU COLUMN
S-1
1" = 1'-0"

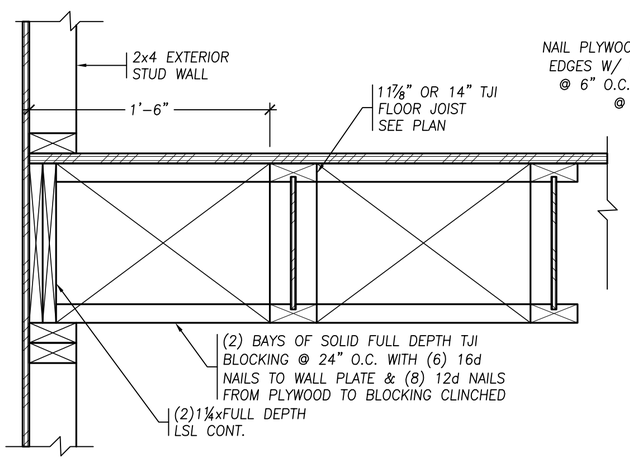

3 EXTERIOR WALL SECTION WITH PARALLEL JOIST CONDITION
S-2 S-3
1½" = 1'-0"

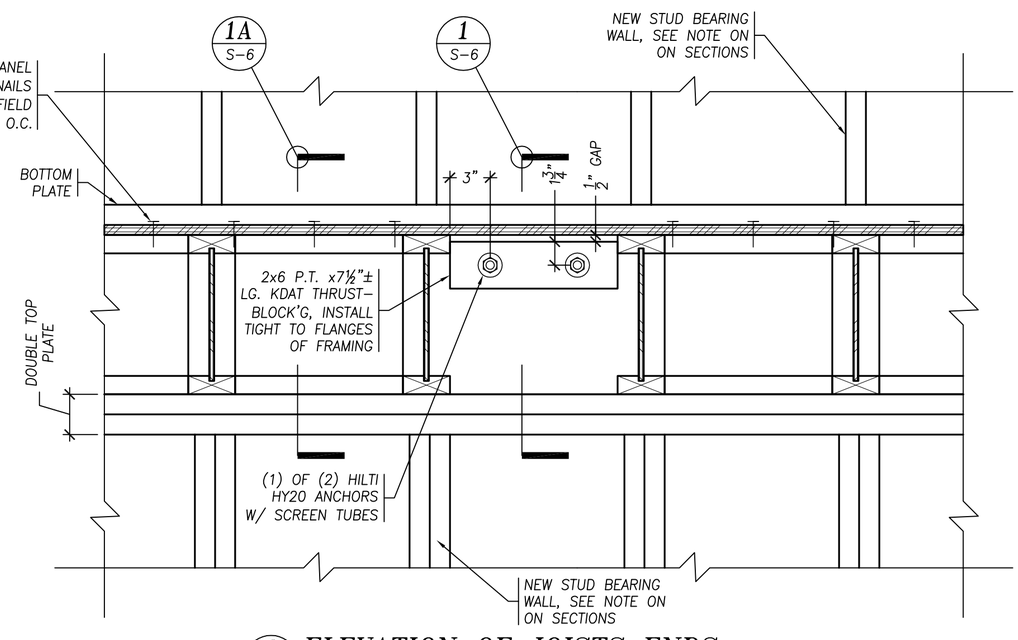

2 ELEVATION OF JOISTS ENDS
S-6
1½" = 1'-0"

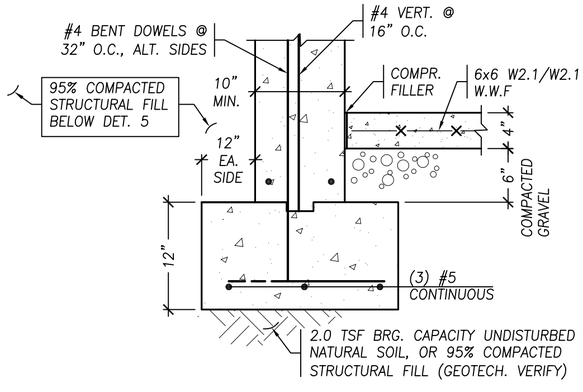

A SECTION
S-6
1" = 1'-0"

RUSSELL FORD TREMAINE
ARCHITECT (617) 567-7788

Structures North
CONSULTING ENGINEERS, INC.
60 Washington St., Suite 401
Salem, MA. 01970-3517
T 978.745.6817 I F 978.745.6067
www.structures-north.com

5 & 6 BRIGHAM STREET
EAST BOSTON, MA

DECEMBER 20, 2007

Structural Details

As Noted

S-6

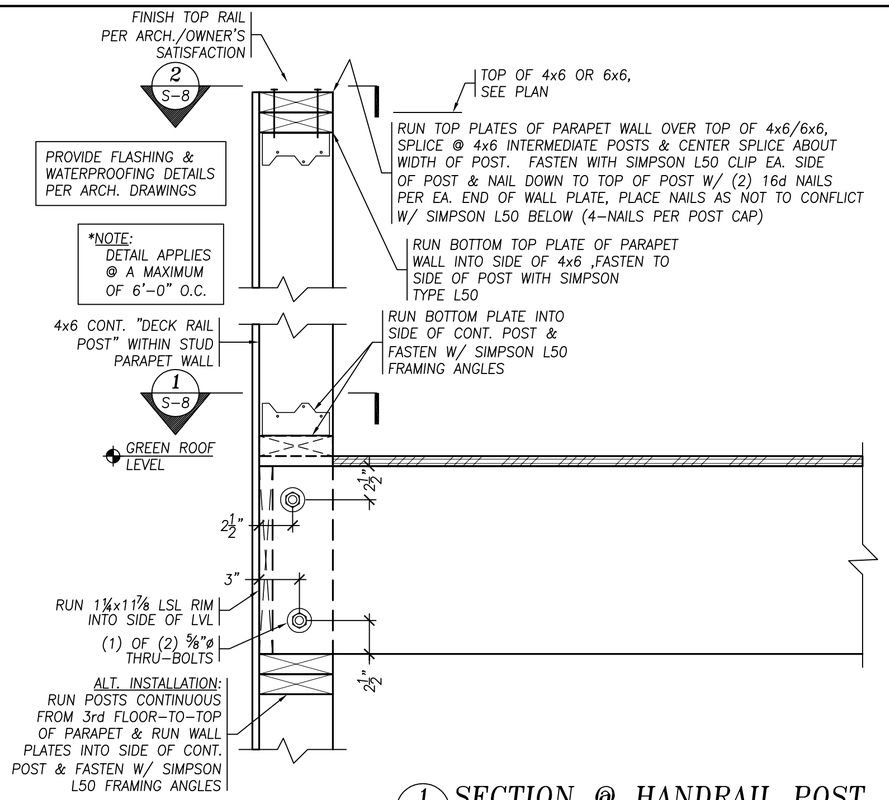

1 S-4 SECTION @ HANDRAIL POST

1½" = 1'-0"

(FRAMING PERPENDICULAR TO WALL)

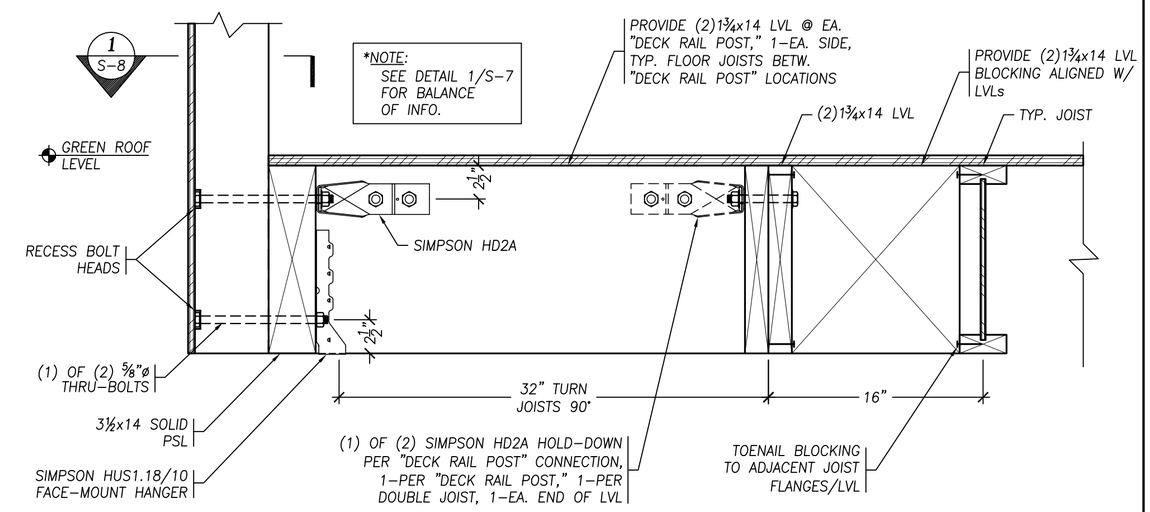

2 S-4 SECTION @ HANDRAIL POST

1½" = 1'-0"

(FRAMING PARALLEL TO WALL)

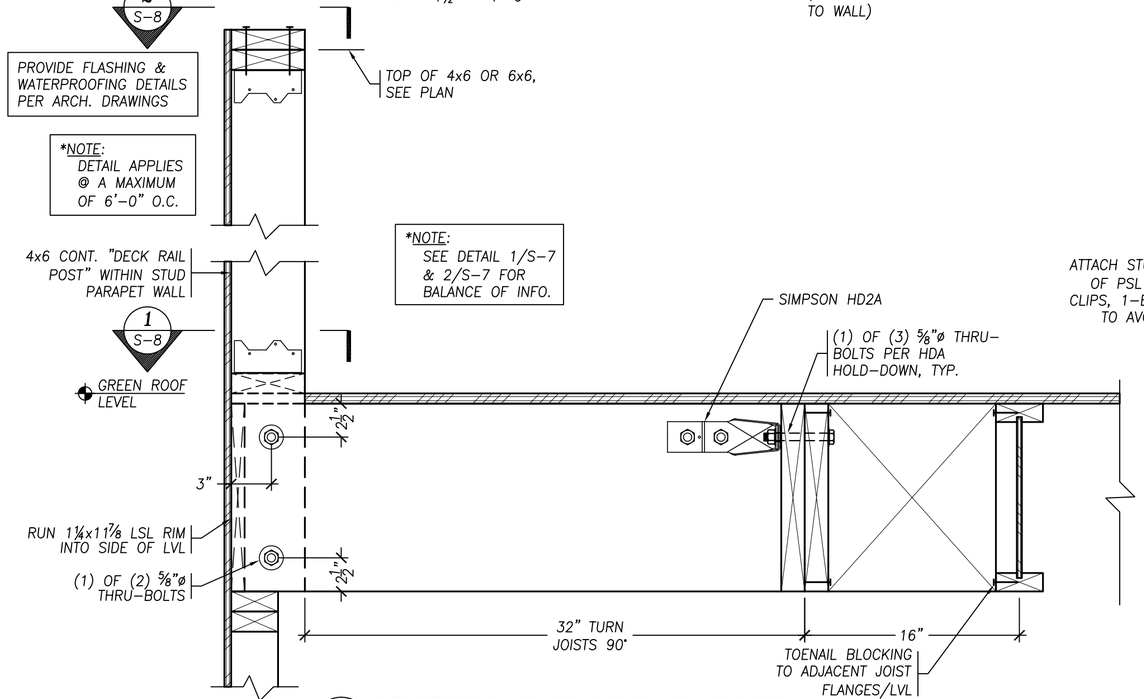

1A S-4 SECTION @ HANDRAIL POST

1½" = 1'-0"

(FRAMING PARALLEL TO WALL)

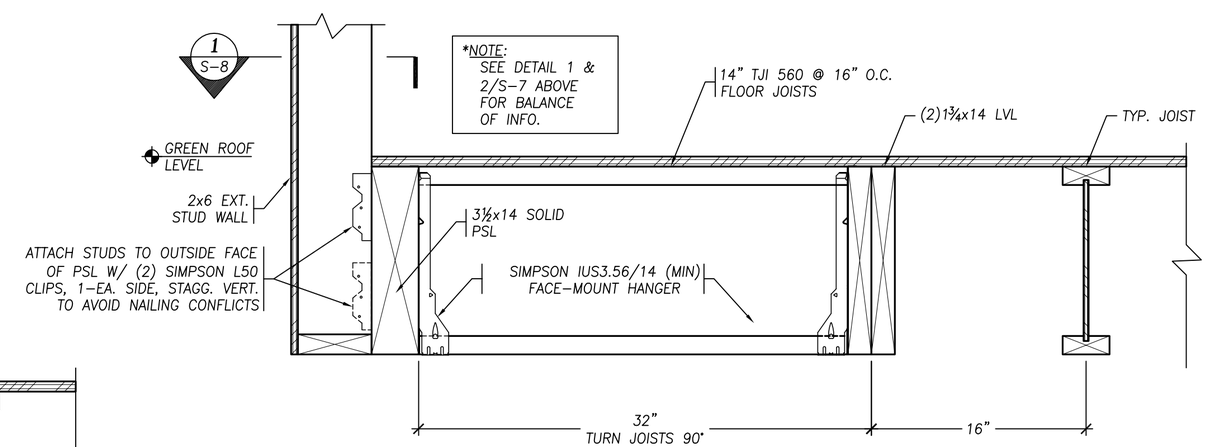

2A S-4 SECTION BETW. HANDRAIL POSTS

1½" = 1'-0"

RUSSELL FORD TREMAINE ARCHITECT (617) 567-7788

Structures North CONSULTING ENGINEERS, INC.
60 Washington St., Suite 401
Salem, MA. 01970-3517
T 978.745.6817 I F 978.745.6067
www.structures-north.com

5 & 6 BRIGHAM STREET

EAST BOSTON, MA

DECEMBER 20, 2007

Structural Details

As Noted

S-7

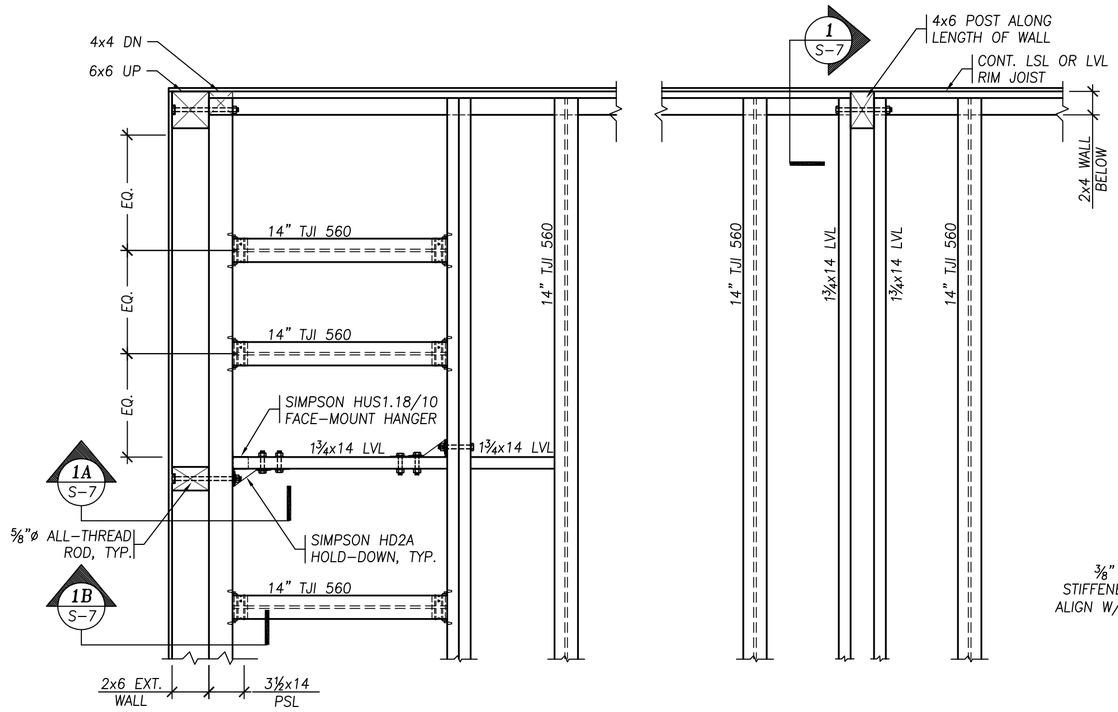

1 S-7 PLAN DETAIL @ FLOOR FRAMING
¾" = 1'-0"

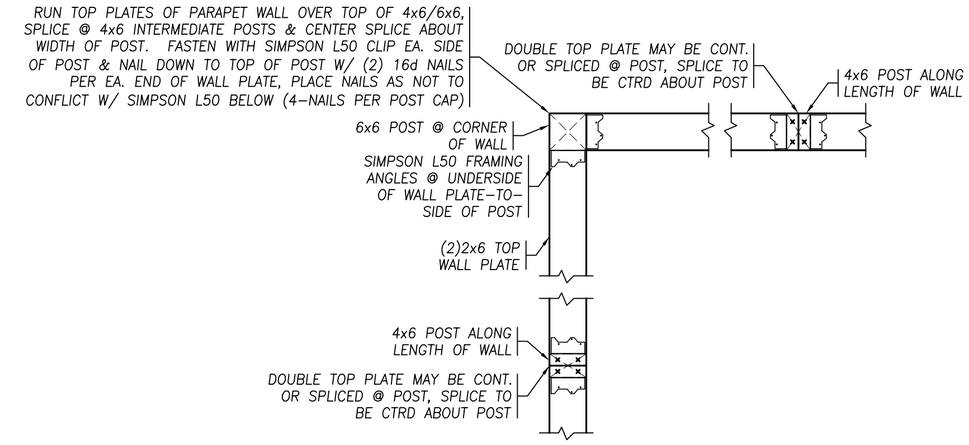

2 S-6 PLAN DETAIL @ TOP OF PARAPET WALL
¾" = 1'-0"

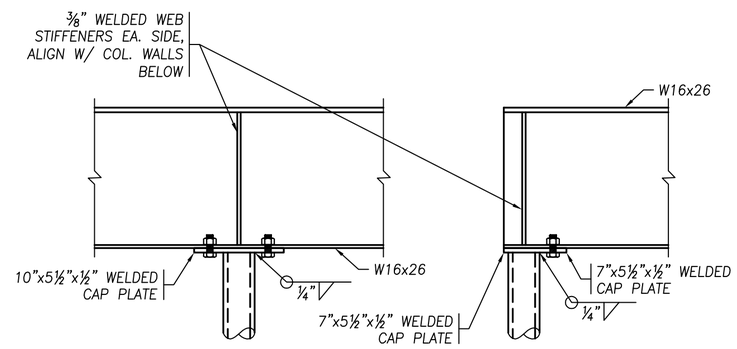

ELEV. @ CANT'L END

ELEV. @ BEAM END

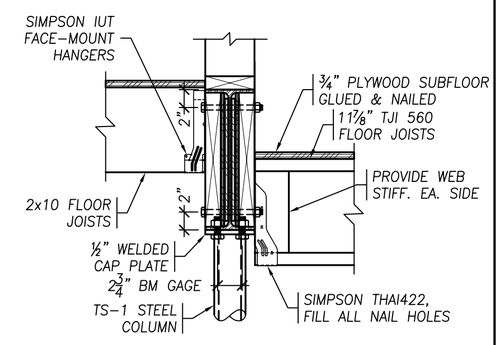

5A S-2 SECTION
1" = 1'-0"

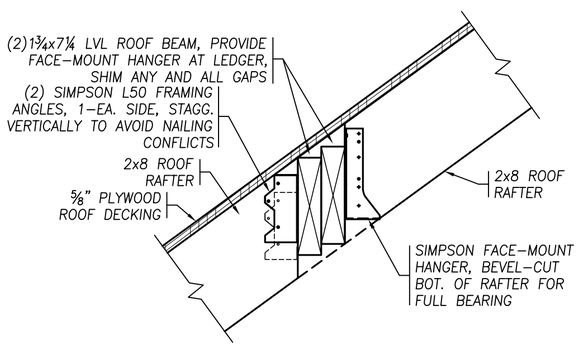

3 S-3 ROOF BEAM SECTION
1½" = 1'-0"

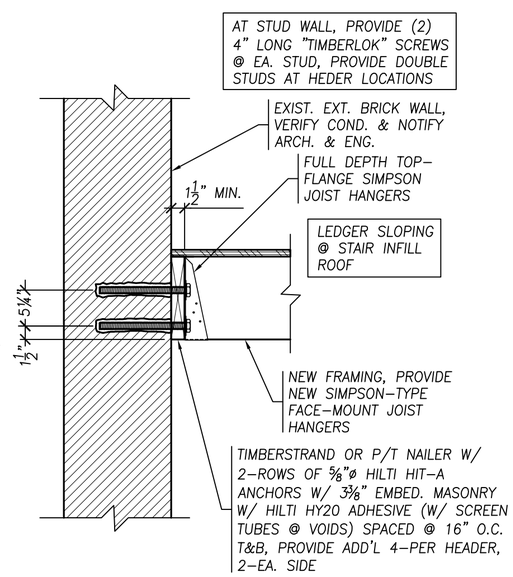

4 SECTION
1" = 1'-0"
S-2
S-3
S-4
S-6

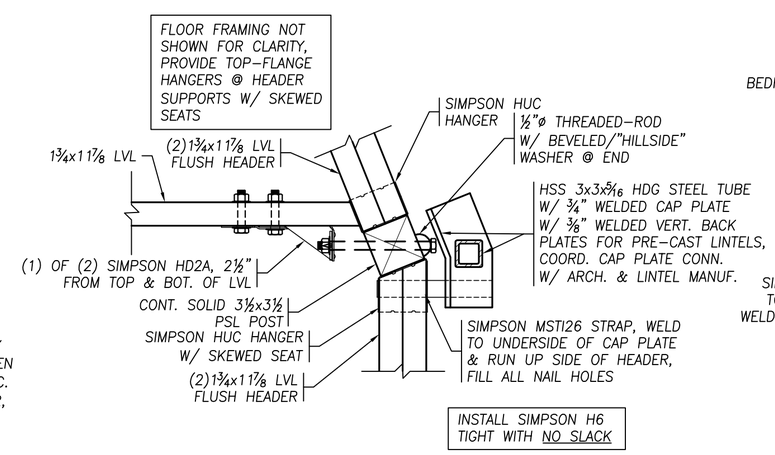

6 S-3 PLAN DETAIL
1½" = 1'-0"

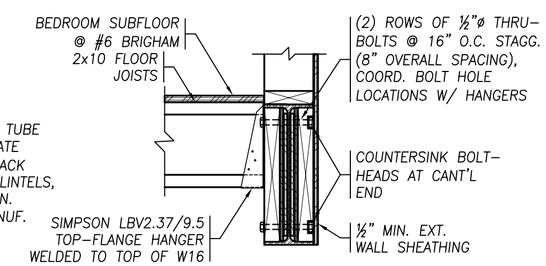

5 S-2 SECTION
1" = 1'-0"

RUSSELL FORD TREMAINE
ARCHITECT (617) 567-7788

Structures North
CONSULTING ENGINEERS, INC.
60 Washington St., Suite 401
Salem, MA. 01970-3517
T 978.745.6817 | F 978.745.6067
www.structures-north.com

5 & 6 BRIGHAM STREET

EAST BOSTON, MA

DECEMBER 20, 2007

Structural Details

As Noted

S-8

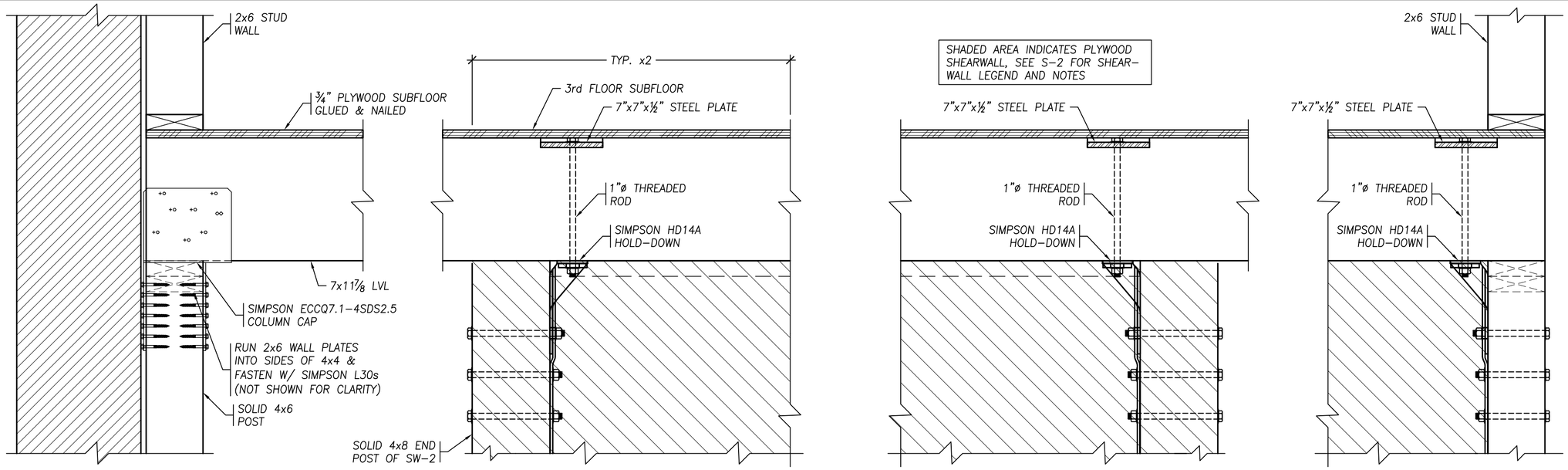

1 S-3 POST CAP/BASE DETAILS FOR SW-2
1½" = 1'-0"

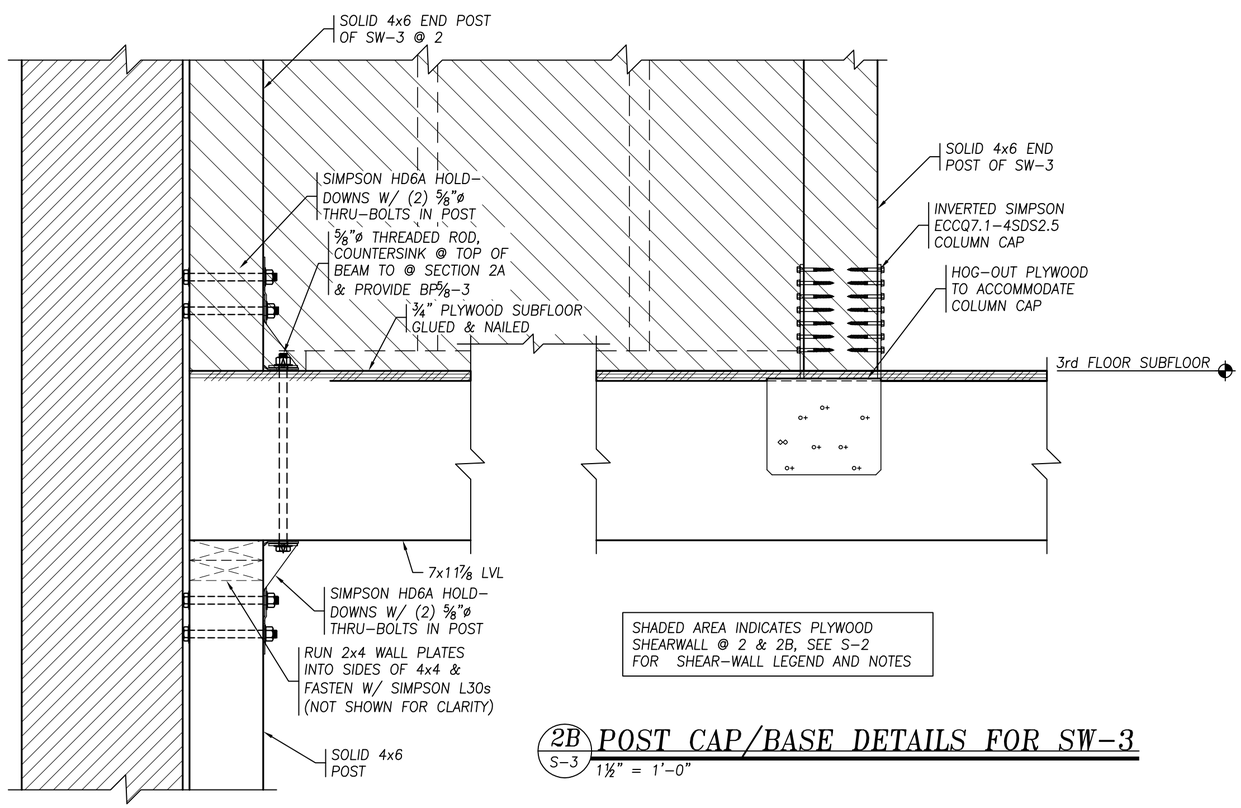

2B S-3 POST CAP/BASE DETAILS FOR SW-3
1½" = 1'-0"

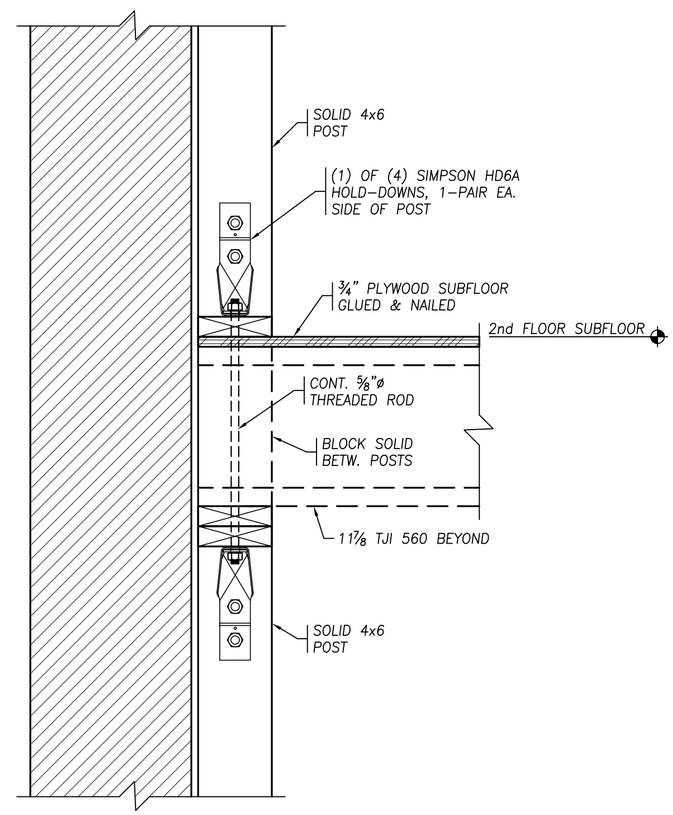

2 S-3 2A S-3 POST CAP/BASE DETAILS FOR SW-3
1½" = 1'-0"

3 S-2 SECTION @ FLOORS BELOW SHEAR WALL BEAMS
1½" = 1'-0"
(SW-2 & SW-3)

RUSSELL FORD TREMAINE
ARCHITECT (617) 567-7788

Structures North
CONSULTING ENGINEERS, INC.
60 Washington St., Suite 401
Salem, MA. 01970-3517
T 978.745.6817 I F 978.745.6067
www.structures-north.com

5 & 6 BRIGHAM STREET
EAST BOSTON, MA

DECEMBER 20, 2007

Structural Details

As Noted

S-9

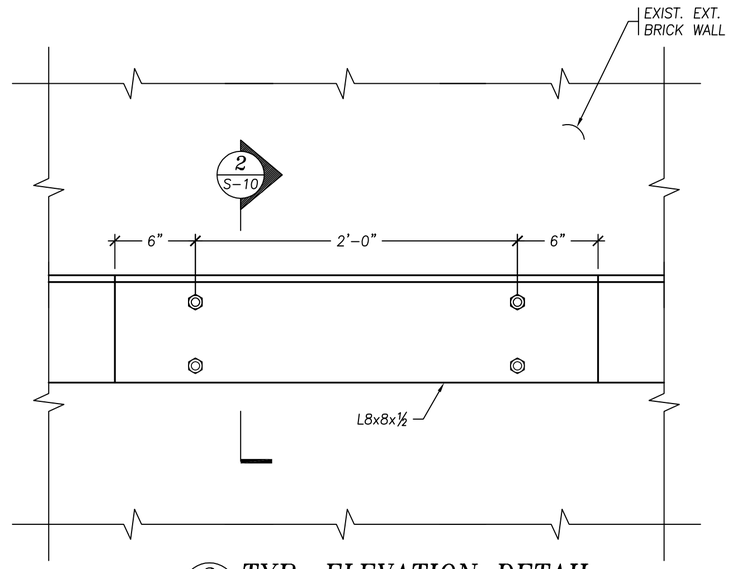

3 S-10 TYP. ELEVATION DETAIL
1½" = 1'-0"

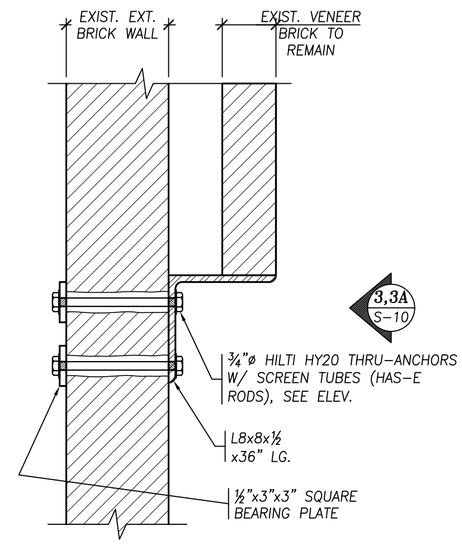

2 S-4 SECTION DETAIL
1½" = 1'-0"

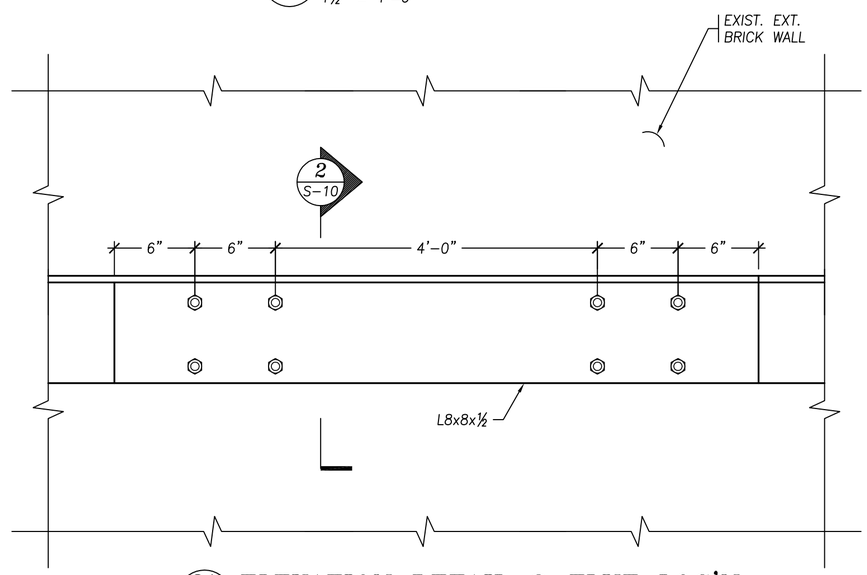

3A S-10 ELEVATION DETAIL @ FLUE LOC'N
1½" = 1'-0"

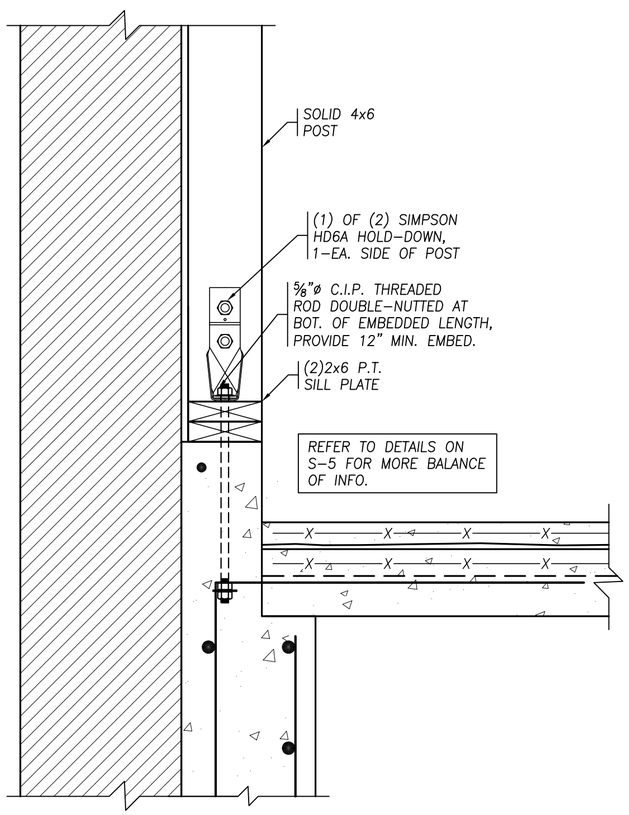

1 S-1 HOLD-DOWN DETAIL FOR SW-2 & 3
1½" = 1'-0"

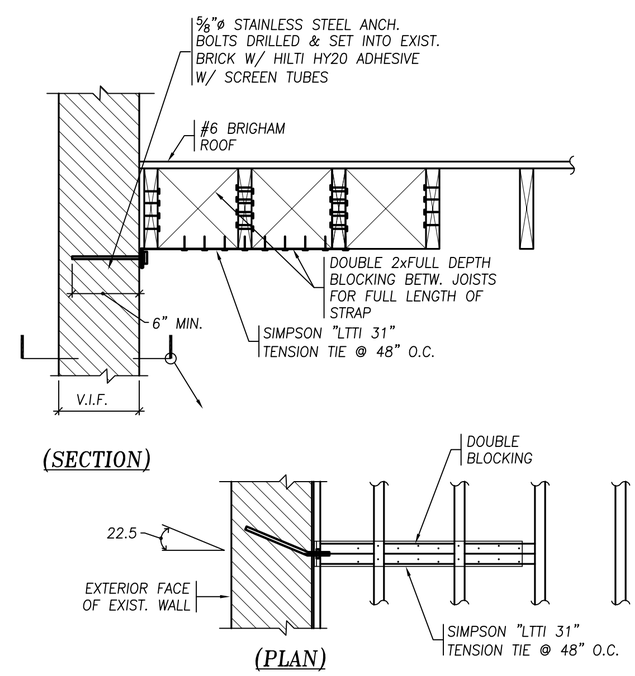

4 S-4 TENSION TIE DETAIL
¾" = 1'-0"

RUSSELL FORD TREMAINE
ARCHITECT (617) 567-7788

Structures North
CONSULTING ENGINEERS, INC.
60 Washington St., Suite 401
Salem, MA. 01970-3517
T 978.745.6817 I F 978.745.6067
www.structures-north.com

5 & 6 BRIGHAM STREET
EAST BOSTON, MA

DECEMBER 20, 2007

Structural Details

As Noted

S-10